TELONICS
TELEMETRY-ELECTRONICS CONSULTANTS
932 E. IMPALA AVENUE • MESA, ARIZONA 85204-6699 U.S.A.
TEL (480) 892-4444 • FAX (480) 892-9139
E-MAIL info@telonics.com
www.telonics.com

TELONICS CR-7
PROGRAMMABLE COLLAR RELEASE
REFERENCE MANUAL

PB009744 Rev C 2019.11.07

Copyright Notice

Copyright © 2017 Telonics, Inc.
All Rights Reserved.

No part of this publication may be copied without the express written permission of Telonics, Inc., 932 E. Impala Ave., Mesa, AZ 85204.

TABLE OF CONTENTS

1 INTRODUCTION 3

2 SHIPPING THE CR-7 4

3 CR-7 USER INTERFACE 4

3.1 Downloading and Installing User Software 4

3.2 Starting User Software (TPP) 5

3.3 Connecting the CR-7 to Your Computer 6

3.4 Reading CR-7 Parameters 8

3.5 Programming the CR-7 for Deployment 9

3.6 Placing the CR-7 in Safe (Storage) mode 12

3.7 Disconnecting the Interface Cable from the CR-7 13

3.8 Triggering CR-7B Release via Iridium 13

4 STANDARD COLLAR INSTALLATION INSTRUCTIONS FOR CR-7 14

4.1 Standard Installation Instructions 14

4.2 Collar Length Adjustment Precautions 15

5 CR-7 ASSOCIATED PRODUCTS 16

5.1 Accessory Items Available for Use with the CR-7 16

5.2 Hardware/Installation Kits for User Attachment of the CR-7 17

6 SERVICE COMMITMENT 17

7 WARRANTY 17

7.1 Exercising the Warranty 18

1 INTRODUCTION

The CR-7 is a programmable collar release mechanism designed to be mounted on a wildlife telemetry collar. The CR-7 is a fourth-generation design that uses a miniature piston actuator to initiate the release. The CR-7 electronics are based on its predecessor CR-5, but the mechanical design is entirely new. As with the CR-5, two CR-7 models are available:

- CR-7A: This is the standard model and includes only a timing mechanism to trigger the release. The unit is programmed to release the collar on a specific date and time.
- CR-7B: This model provides an enhanced feature set. The CR-7B provides the ability to release on a specific date and time, and also includes the ability to receive commands from the main collar electronics via short-range radio link. When paired with Telonics TGW-4x77-4 and TGW-4x78-4 GPS-Iridium collars, users have the ability to remotely trigger release through the Iridium network.

The CR-7[1] is intended for use on collars with a width of 1.5 inches, has a weight of 35g, and has an operating temperature range of -40° C to +60° C. For collars with a width of 2 inches or greater, use of the CR-5 is recommended.

Figure 1, Telonics Model CR-7 Collar Release

The combined operational and storage life of the CR-7 battery is 5 years. This provides flexibility for situations in which collar deployment must be delayed. The CR-7 Release Safety can be activated to place the CR-7 in a safe (storage) mode. When needed again, the unit can be reprogrammed with a new release date and the safety can be turned off for deployment.

The accuracy of the clock on board the unit provides for a release time accuracy of +/- 13 minutes per year at 25° C typical. Under <u>continuous</u> operation at extreme cold conditions (-40° C), the clock could lose as many as 110 minutes per year.

[1] In this document, "CR-7" will be used when discussing the device in a generic sense. The "A" and "B" model suffixes will be used when describing unique abilities or limitations.

The CR-7 has been designed to withstand shock, temperature, and moisture conditions encountered in terrestrial wildlife applications. The latch design of the CR-7 is highly resistant to random shock events.

Most users have the CR-7 programmed and installed by Telonics at the time of collar and CR-7 purchase (at no additional charge over the cost of the CR-7 and collar). Alternatively, users can program and install the CR-7A on Telonics collars designed for the release device. If the user installs the CR-7A, there are warranty implications as noted at the end of this document. Using a CR-7B (with the commanded release option enabled) requires that Telonics pair the CR-7B with the main GPS-Iridium unit and install the CR-7B onto the collar to assure that the commanded release will operate properly.

If a user decides to change the programmed release parameters, two choices are available. The CR-7 can be returned to Telonics to make the change (reprogramming charges may apply). Or, it may be more cost effective and quicker for the user to reprogram the unit as described in this manual.

The CR-7 is designed for single deployments (one time use) and cannot be refurbished.

2 SHIPPING THE CR-7

There are no special shipping restrictions placed on the CR-7 by the International Air Transport Association (IATA), the United States Department of Transportation (USDOT) or the Bureau of Alcohol, Tobacco, Firearms, and Explosives (ATF).

3 CR-7 USER INTERFACE

If you anticipate a need to view or change release parameters in the CR-7:

- You will need to purchase a USB interface cable and an adapter (see sections 3.3, 5.1). Note that the CR-7B radio link is used for communicating release **commands**. Reading and programming release **parameters** must be done via the interface cable.
- You will need to obtain programming and maintenance software (see section 3.1). **It is very important that you install the software first, before attaching the USB cable to your computer.** Using this approach will ensure that the proper Windows USB drivers are pre-installed and available when you plug the USB cable in for first use.

If you anticipate a need only to send release commands via the Iridium network:

- You will need to obtain programming and maintenance software (see section 3.1).

3.1 Downloading and Installing User Software

The software component of the CR-7 user interface is Telonics Product Programmer (TPP); an application that runs on Microsoft® Windows® based PCs.

With respect to the CR-7, TPP is used for the following purposes:

- Reading and displaying currently programmed CR-7 release parameters.
- Programming new CR-7 release parameters.
- Programming the CR-7 for storage.
- Triggering a CR-7B remote release via the Iridium network.

TPP is described in more detail and is available for download at the Telonics web site (http://www.telonics.com/software/tpp.php). There are no fees associated with the download or installation of the TPP application.

Following installation, you may use TPP to read CR-7 release parameters and to trigger a CR-7B remote release via the Iridium network **without** needing to purchase a license for TPP.

If you wish to **program** the CR-7 for a deployment or for storage purposes, you will need to purchase a **TPP-CR** or **TPP-ALL** license. Following the purchase of your license, Telonics will provide you with an authorization code to enable CR-7 **programming** capabilities in the software.

Note: The TPP installer will permit installation only on computers running Windows 2000 and newer operating systems.

To install TPP software downloaded from the Telonics web site:

- Use Windows Explorer to navigate to the folder containing the downloaded installation file.
- Double click the file and follow the instructions as they appear on the screen.

3.2 Starting User Software (TPP)

Start the program by double-clicking the **TPP x.xx.xxxx** icon located on the Windows desktop. The main window and product model selection dialog will be displayed (Figure 2).

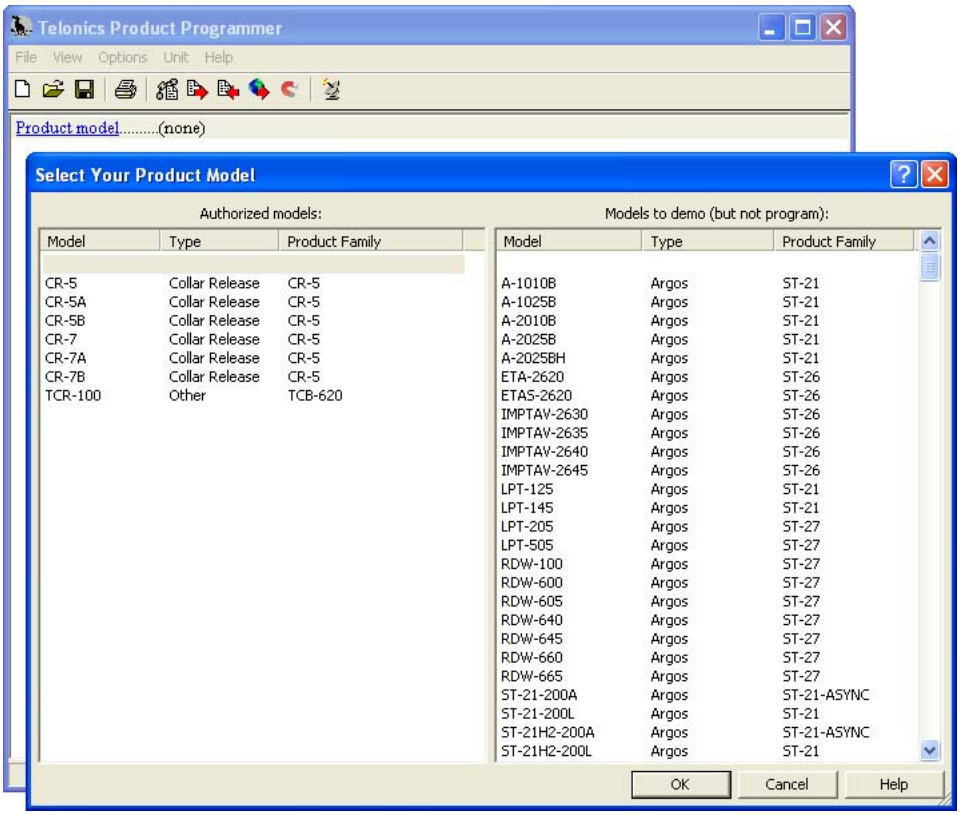

Figure 2

Selection of the product model is required when **creating** a programming file, but is not required when reading a unit that is already programmed (TPP will determine the model based on information read from the unit). Note that all programming procedures in this document will begin by having you **read** the current CR-7 programming information. Click the **Cancel** button to dismiss the product model selection dialog.

3.3 Connecting the CR-7 to Your Computer

Communications with the CR-7 are accomplished using a TSC-9A interface cable (to connect to your computer) and a CN009813-001 adapter (to connect the TSC-9A to the CR-7). For your convenience, the TSC-9A may be used with or without the included USB extension cable. Note that older versions of Telonics interface cables (TSC-3, TSC-4A, and TSC-7A) can also be used with TPP, but are no longer sold or supported by the Telonics technical staff.

When you connect the TSC-9A cable to your computer for the first time, Windows will install a device driver for that specific cable. This process typically takes only a few seconds, but can take longer in some cases.

Note: TPP defaults to automatic support for TSC-4A/TSC-7A/TSC-9A USB interface cables. As long as one of these three types of interface cables is being used, no other configuration is required.

Figure 3, USB extension cable, TSC-9A interface cable, and CN009813-001 adapter

If the CR-7 is currently installed on a collar, remove the collar hardware by first removing the two lock nuts using a nut driver or suitable wrench (Figure 4).

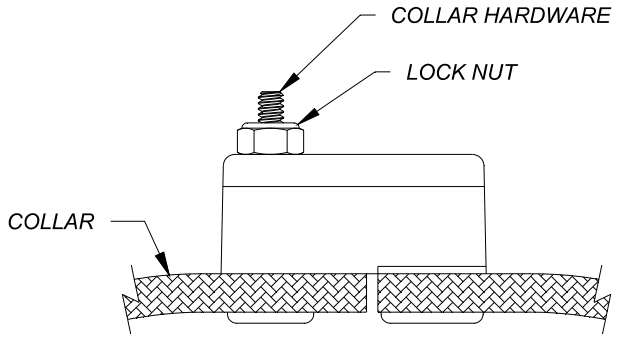

Figure 4

Pull the collar material away from the bottom of the collar release mechanism (Figure 5).

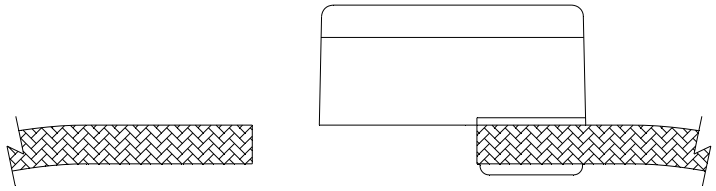

Figure 5

Carefully remove and set aside the programming port protective cover (Figure 6). The protective cover can be re-installed when reading and/or programming is complete. If the protective cover is torn or damaged severely during removal, discard it as other materials can be used in its place.

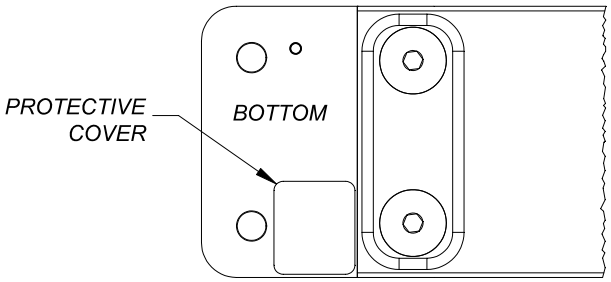

Figure 6

Note: If you have prior experience with the Telonics CR-2a collar release, that model uses a conductive rubber shunt across the two programming pins (Figure 7) to protect the internal circuitry from damage due to electrostatic discharge. By design, the CR-7 does not use the conductive rubber shunt (it's not missing).

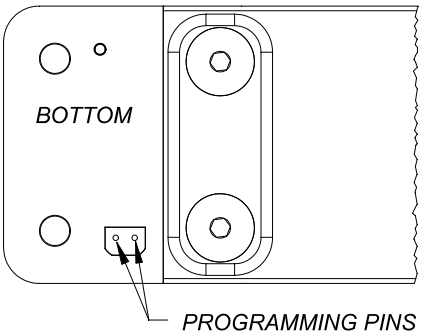

Figure 7

Connect the TSC-9A interface cable to a USB port on your computer and to the CR-7 programming pins (Figure 8) using adapter CN009813-001.

Figure 8

3.4 Reading CR-7 Parameters

You may read and inspect the parameters programmed in the CR-7 by clicking the **Retrieve Parameters** button in the TPP toolbar (Figure 9).

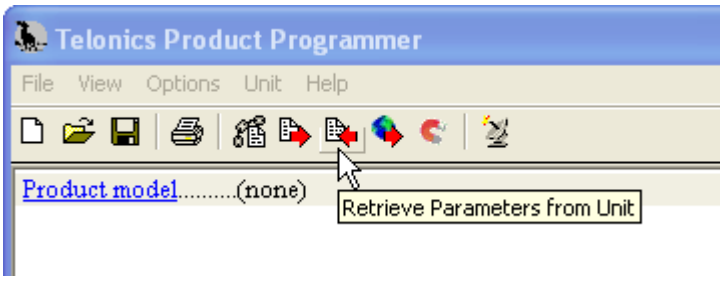

Figure 9

After a successful Retrieve Parameters operation, TPP will display the CR-7 CTN (Serial Number), various manufacturing data, as well as the current release parameters in the main program window (Figure 10).

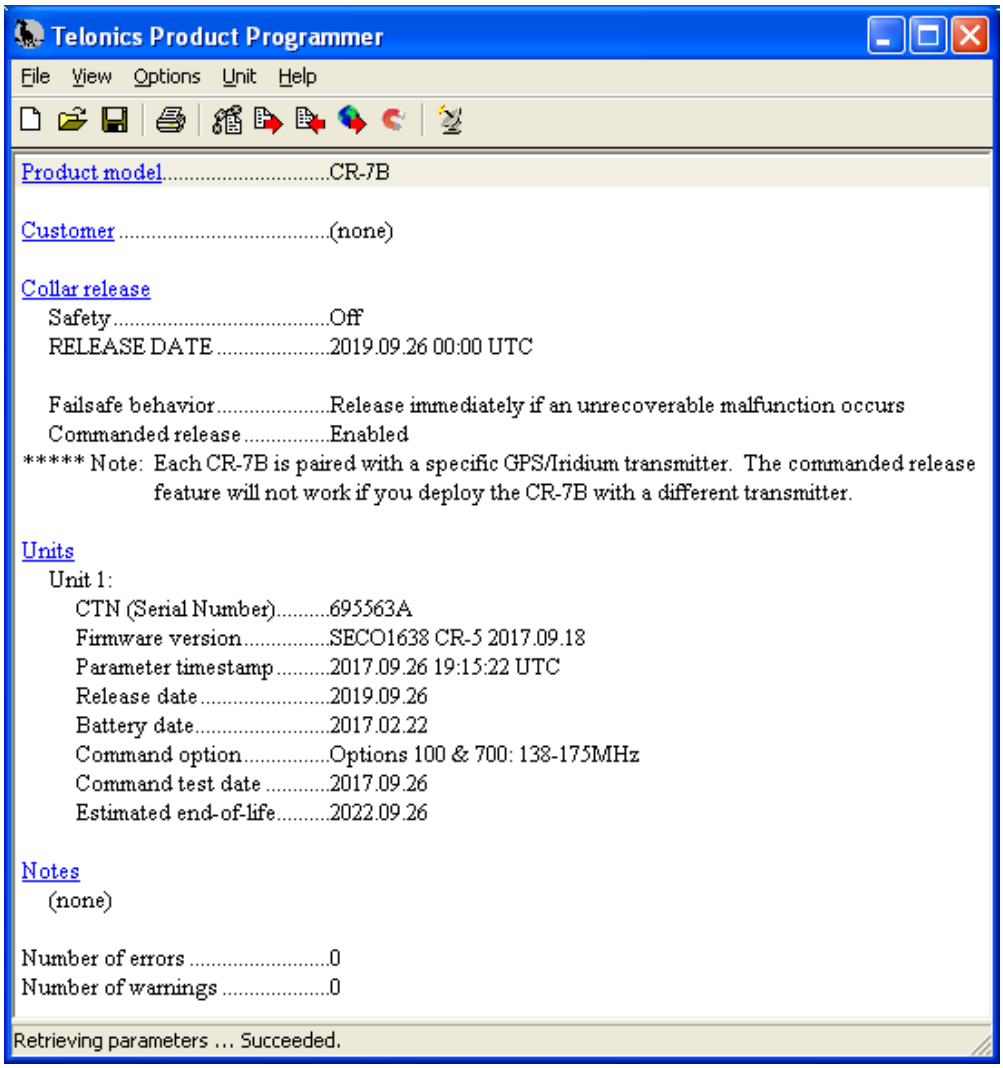

Figure 10

3.5 Programming the CR-7 for Deployment

This section describes the process of programming the CR-7 for an <u>actual</u> deployment. DO NOT attempt to TEST a CR-7. The unit will function (release) only one time and cannot be reset.

1. Begin the process by reading the current parameters programmed in the CR-7 (complete all steps in section 3.4).

2. **The CR-7 real time clock will be synchronized to the clock in your computer during the programming process. If your computer's date or time is incorrect, the CR-7 will not release when expected. Verify the accuracy of your computer's date and time prior to programming the unit. If necessary, adjust the date, time, and time zone via the Windows Control Panel.**

3. Click the **Collar release** section name in the main window (Figure 10). This will open the Collar Release Settings dialog (Figure 11).

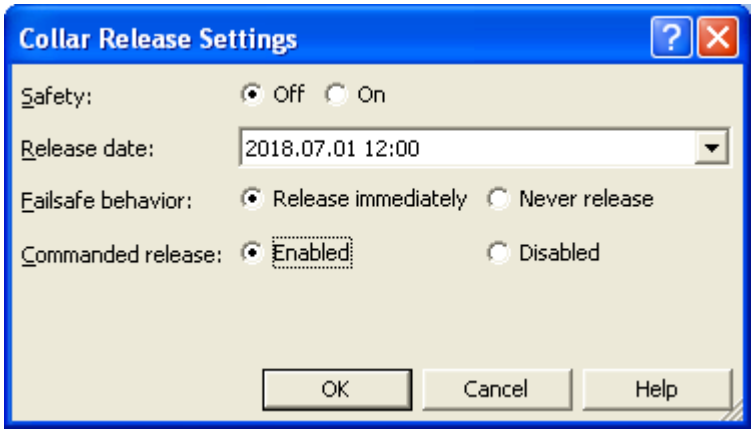

Figure 11

4. In the Collar Release Settings dialog, ensure that the **Safety** is **Off**. The Safety works like the safety on a firearm. **In order for the release mechanism to actuate, the Safety must be Off.**

5. In the **Release Date** control, select the date and time at which you want the CR-7 to release. **The release time must be specified using the 24-hour UTC (Coordinated Universal Time) format.** You may edit the date and time fields directly by clicking on the desired field in the date control. You may also enter the date using a calendar control by clicking the down arrow at the right end of the date control.

6. The CR-7 has been designed to be fault tolerant. However, there are limits to the device's ability to cope with adverse conditions. If the CR-7 determines at some point that it cannot continue its mission reliably, then it will execute its programmed **Failsafe behavior**. Your choices are: 1) **Release immediately**, or 2) **Never release**. You may want to consider the study animal's future well-being, in addition to the expected habitat conditions before making this decision.

7. If you have a CR-7B, then you have the option to **enable** or **disable** the **Commanded release** feature. This feature is compatible only with Telonics TGW-4x77-4 and TGW-4x78-4 GPS-Iridium systems and allows you to send a release command to the collar via the Iridium link (see section 3.8).

   Note: Enabling the **Commanded release** feature does not immediately cause a release to occur; it simply enables the CR-7B to **listen** for the release command to be transmitted

from the main collar electronics after the command has been received via the Iridium network.

8. Click the **OK** button to close the Collar Release Settings dialog.

9. Click the **Send Parameters** button on the toolbar (Figure 12).

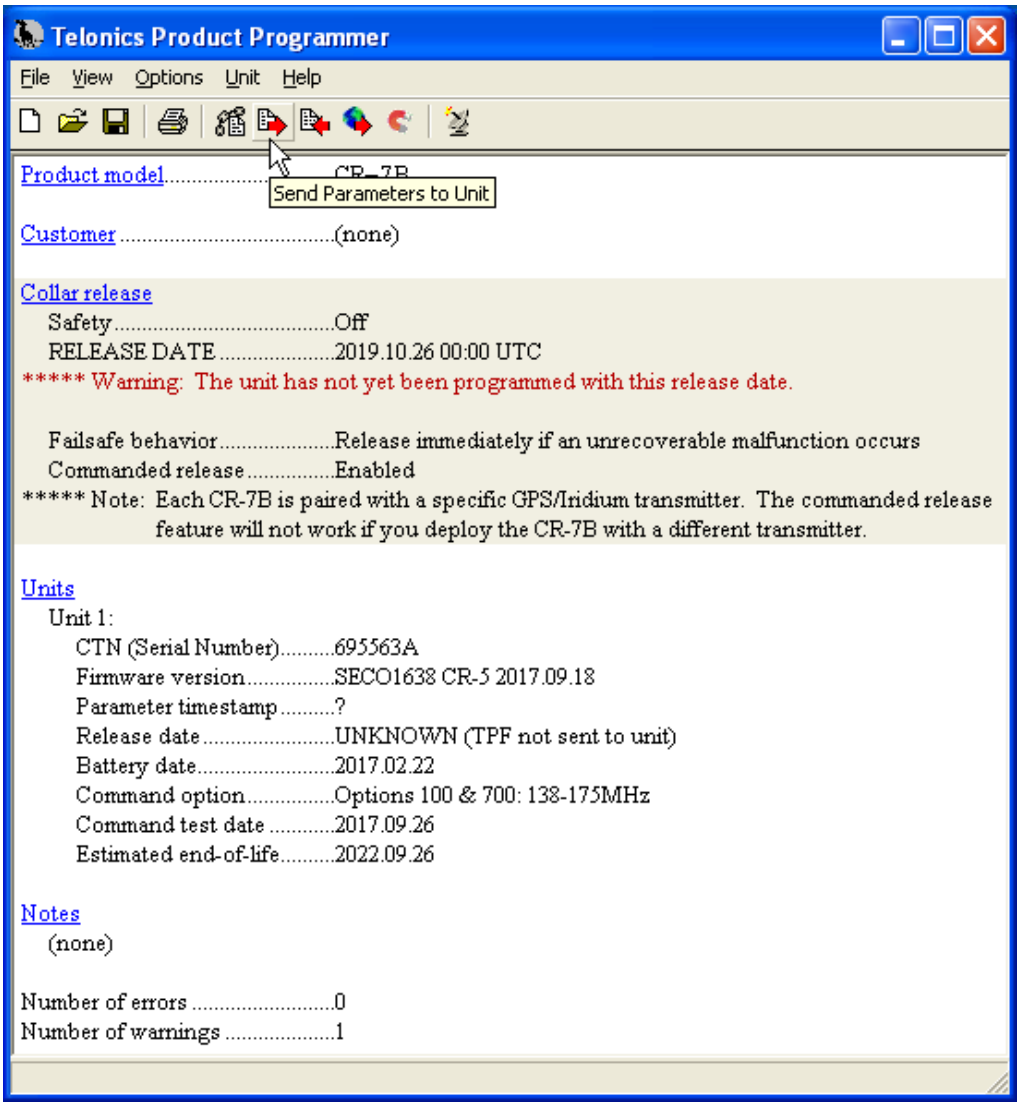

Figure 12

Once underway, programming typically takes about 5 to 10 seconds. If an error is encountered during the process, a message describing the failure will be displayed. When the programming and verification procedure is complete, a message will be displayed indicating successful completion (Figure 13).

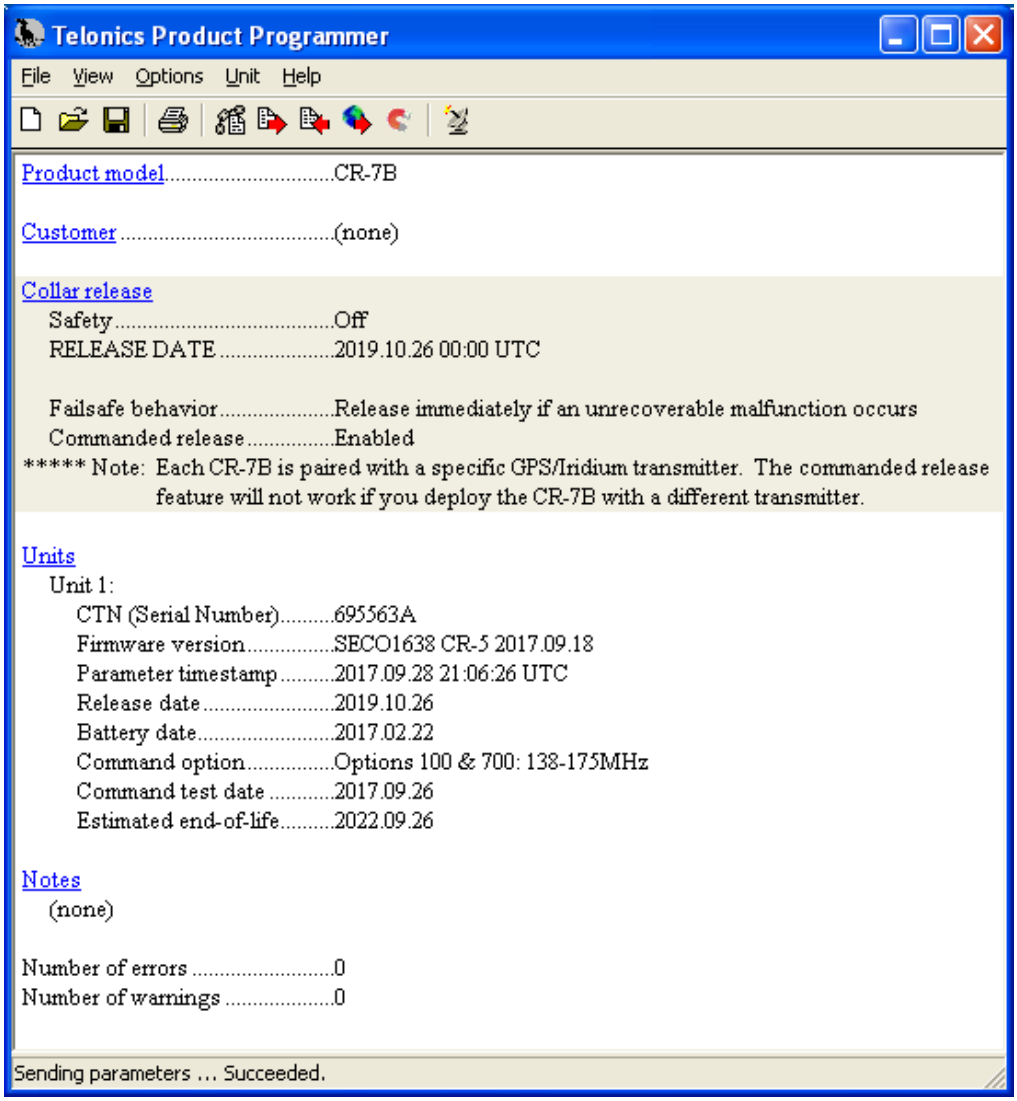

Figure 13

3.6 Placing the CR-7 in Safe (Storage) mode

Occasionally, a wildlife study will encounter a complication requiring that a new collar (or one recovered from the field) sit idle on the shelf for an extended period of time. In such cases, Telonics recommends that the collar release device be placed in safe mode during the storage period. This is done primarily to prevent an unintended release, and also has a side benefit of conserving CR-7 battery energy. When a new study opportunity presents itself, the CR-7 can be re-programmed and deployed. To place the CR-7 in safe (storage) mode:

1. Begin the process by reading the current parameters programmed in the CR-7 (complete all steps in section 3.4).
2. Click the **Collar release** section name in the main window (Figure 10). This will open the Collar Release Settings dialog (Figure 11).
3. Set the **Safety** setting to **On**.
4. Click the **OK** button to close the Collar Release Settings dialog.

5. Click the **Send Parameters** button on the toolbar (Figure 12).
6. Programming typically takes about 5 to 10 seconds. If an error is encountered during the process, a message describing the failure will be displayed. When the programming and verification procedure is complete, a message will be displayed indicating successful completion.

Note: With the Release Safety **ON**, the unit will **NOT** release, regardless of the date and time programmed.

3.7 Disconnecting the Interface Cable from the CR-7

When reading/programming is complete, disconnect the CN009813-001 adapter from the CR-7. Ensure that the bottom of the CR-7 and the programming port are free of dust and debris and then cover the programming port. The following are choices in descending order of preference:

- A new protective cover from the CR-7 accessory kit (see section 5.1).
- The protective cover that was removed prior to the read/program procedure, only if the cover is still in good condition (no tears) and adhesive side is clean.
- Duct tape. Be sure to cut to proper size so that it does not overlap the metal latch plate.

Note: Keep in mind that there are two goals associated with the protective cover: 1) prevent dirt and debris from getting into the programming port and 2) protect the programming pins from damage due to incidental contact with studs on the collar hardware during re-assembly.

Note: The CR-7 does not use a conductive rubber shunt across its programming pins. If you have spare shunts from previous projects involving CR-2a, do not use them in the CR-7.

3.8 Triggering CR-7B Release via Iridium

When the CR-7B is paired with Telonics TGW-4x77-4 and TGW-4x78-4 GPS-Iridium collars, users have the ability to remotely trigger release through the Iridium network. In order for this feature to work properly:

- The collar must be specially built to optimize radio communications between the GPS-Iridium system and the CR-7B. If you ordered your collar with a CR-7B, then this has been done as a normal part of the manufacturing process.
- The CR-7B Commanded release feature must be enabled (see section 3.5).
- The GPS-Iridium system onboard the collar must be programmed with the CTN (serial number) of the CR-7B installed on that collar. This pairing is established at the factory and users should: 1) exercise care when using TPP to program their GPS-Iridium systems to preserve the CR-7B CTN information, and 2) ensure that the CR-7B (if ever removed from the collar), be installed back onto that same collar.
- The .TPF file used to program the GPS-Iridium system must be saved and must remain available for use when issuing the release command. The .TPF file contains the CTN of the GPS-Iridium system as well as the Iridium transceiver IMEI (International Mobile

Equipment Identity). These two pieces of information are required in order to create the message containing the release command.

- An internet connection is required to allow TPP to send the message to the Iridium network.

To trigger a CR-7B release via the Iridium network:

1. Open TPP.
2. In TPP, click **File | Open…**
3. In the **Open Parameter File** dialog, navigate to the .TPF file used to program the GPS-Iridium system onboard the collar you wish to release. Click **Open** to load the file.
4. In TPP, click **File | Trigger Collar Release.**
5. In the **Trigger Collar Release** dialog, select the system to be released.
6. Verify that you have the correct system selected. **Once the command is sent, the action cannot be undone.**
7. Click the **Send** button.
8. If you wish to send a release command to another GPS-Iridium system, go to step 5 (if the GPS-Iridium system is included in current .TPF file) or go to step 2 (if the GPS-Iridium system is included in a different .TPF file). When done sending release commands, go to step 9.
9. Close the **Trigger Collar Release** dialog.
10. Close TPP.

After a release command is sent, it will remain queued in the Iridium gateway until your collar establishes a connection with the Iridium network to send collected data, to send a priority message, or to just check for a command. During that process, the release command will be delivered to the connected GPS-Iridium system and then executed immediately after the Iridium communication session completes.

Note that because the transfer of the release command relies on the targeted system establishing communication with the Iridium network, a delivery latency will occur (most GPS-Iridium systems are programmed to communicate with the Iridium network every 1 to 2 days).

Note also that once the targeted GPS-Iridium system receives the release command, it will send an acknowledgment via priority message over the Iridium network. The acknowledgment will appear in reports created by Telonics Data Converter (TDC) and will be forwarded to your regular email address or cellphone if you subscribe to the metOcean LiNC Data Service.

4 STANDARD COLLAR INSTALLATION INSTRUCTIONS FOR CR-7

Note: The following describes the installation of a CR-7 collar release mechanism onto a Telonics collar that has been designed and built to accept the mechanism.

4.1 Standard Installation Instructions

Locate the latch on the bottom of the collar release mechanism and the latch cavity on collar end (Figure 14). Note: If the latch cavity does not contain silicone lubricant, fill it

approximately half full before assembly. Silicone lubricant is available in an accessory kit (see section 5.1).

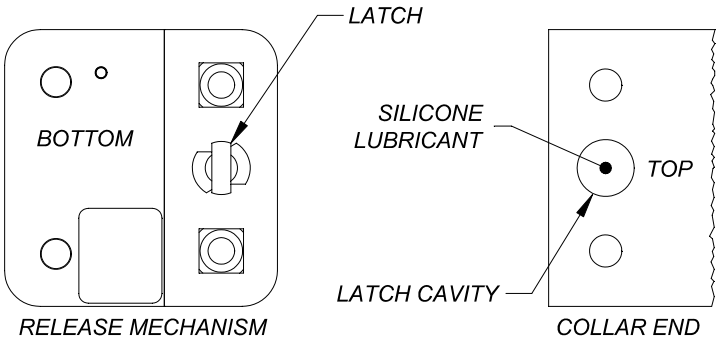

Figure 14

Place the collar release mechanism on top of the collar with the latch in the latch cavity, and attach using self-locking screws provided (Figure 15). Tighten screws until the plate compresses into the collar material. Refer to assembly diagram (Figure 16) for correct installation.

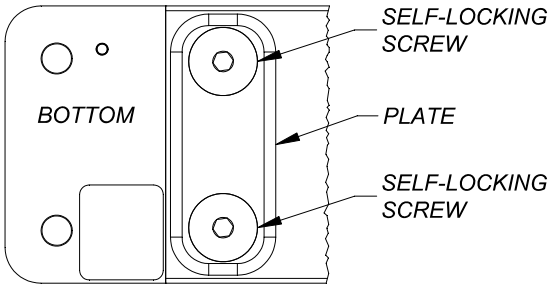

Figure 15

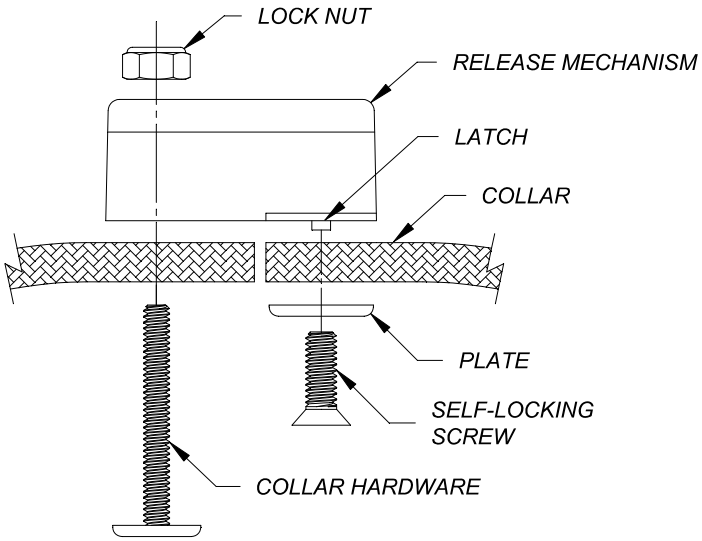

Figure 16

Note: Do not trap any antennas in or under the CR-7 release mechanism or the release will fail to function properly.

4.2 Collar Length Adjustment Precautions

The correct way to cut collar length is to have a 1/16 to 1/8 inch (1.5 - 3.5 mm) gap between collar ends after collar hardware is installed (Figure 17). Do not allow excess collar material to overlap (Figure 18) as this may cause release failure.

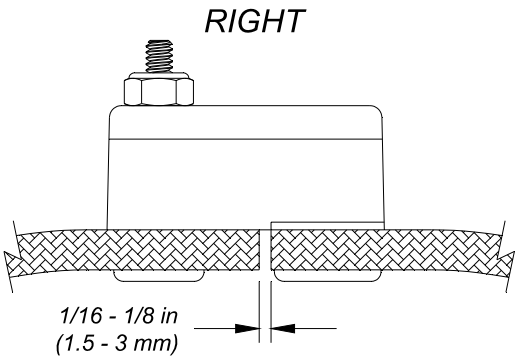

Figure 17

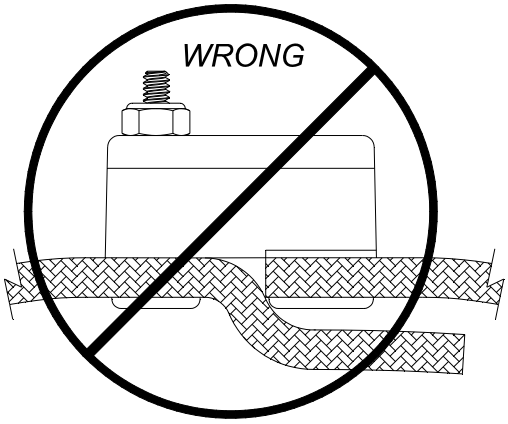

Figure 18

IMPORTANT: Be sure that you are using proper hardware based on collar thickness (see Hardware/Installation Kits in section 5.2).

Using a torque wrench, tighten the two self-locking screws (Figure 15 and Figure 16) to **26 inch-pounds**. Failure to use proper length self-locking screws or inadequate torque while tightening may allow the screws to back out while the collar is deployed.

Attach the opposite end of the collar with collar hardware and lock nuts using a nut driver or a suitable wrench (Figure 16). Tighten nuts until the collar hardware just compresses into the collar material (do not overtighten).

5 CR-7 ASSOCIATED PRODUCTS

5.1 Accessory Items Available for Use with the CR-7

Part Number	Description
TSC-9A	Interface cable: requires a USB port on the PC, compatible with CR-2a, CR-5, CR-7, Gen 4 GPS/Argos systems, and most other systems supported by the Telonics Product Programmer (TPP) software. Includes a 3ft USB extension cable.
CN009813-001	Adapter: Interface cable to CR-7.
TPP	Telonics Product Programmer software for Windows 2000/XP/Vista/7/8/10 available via web download.
CM009703-001	Accessory kit for CR-7: services approximately 25 units and includes a 3/32” Allen wrench, protective covers, and silicone lubricant.

5.2 Hardware/Installation Kits for User Attachment of the CR-7

Part Number	Description
HD009704-001	CR-7 hardware/installation kit for collars made from 1/16" material on 1/8" material. Contents: 1 ea Size #2 collar clamp bottom plate with 1-1/4” studs (HD000461-013) 1 ea CR-7 hardware plate (HD009673-001) 2 ea Nylock nut, stainless steel, 6-32 (HD000459-001) 2 ea Cap screw, socket/flat head, self-locking, stainless, 8-32 x 1/2" (HD007055-001)
HD009704-003	CR-7 hardware/installation kit for collars made from 1/16” material on 1/16" material. Contents: 1 ea Size #2 collar clamp bottom plate with 1-1/4” studs (HD000461-013) 1 ea CR-7 hardware plate (HD009673-001) 2 ea Nylock nut, stainless steel, 6-32 (HD000459-001) 2 ea Cap screw, socket/flat head, self-locking, stainless, 8-32 x 3/8" (HD007055-003)

6 SERVICE COMMITMENT

Since 1970, Telonics has built a reputation based on product quality, product support, service, and customer satisfaction. Telonics strives to produce the highest quality products, and to support those products accordingly.

Because of extreme conditions and the unpredictable nature associated with most telemetry applications, problems occasionally arise. Most problems can be resolved quickly. In all cases, we hope to be able to work in partnership with users to resolve problems to the user's satisfaction and to uphold our demonstrated commitment to excellence. If problems should arise, all products must be returned to our factory for failure analysis.

7 WARRANTY

The CR-7 collar release device includes the following main components: internal electronics, power supply (battery), an actuator, exterior packaging, and attachment hardware.

The internal electronics (excluding the battery) are warranted to be free from defects in material and workmanship and to perform to the operational specifications over the specified operating temperature range as published by Telonics for up to a maximum of one (1) year from the date of initial shipment of the unit by Telonics.

Warranty Limitations

The warranty is voided if the CR-7 is installed on any other manufacturer’s collar.

Telonics does not manufacture batteries (electrochemical cells), and therefore cannot warranty the battery lifespan, mechanical integrity or other battery performance issues in our collar releases (CR-2a, CR-5, and CR-7). Telonics does conduct extensive testing of all types of

battery systems to determine suitability to various applications. Telonics also tests every battery installed in each release device. Despite the use of these advanced testing procedures, it is not possible to determine a specific battery's lifespan or mechanical integrity.

No warranty is expressed or implied with regard to abnormal events or damage due to human actions such as gunshot damage, vehicle encounters, etc. Further, no warranty is expressed or implied with regard to damage resulting from misuse, accident, unauthorized service, extreme conditions, or other causes not specifically enumerated herein.

The CR-7 collar release devices are sold and warranted separately from radio transmitters, satellite or GPS collars, or any other devices. Repair or replacement does <u>not</u> include the collar, transmitter, satellite PTT or GPS unit and does not include capture costs.

This product is supplied without any further warranties or conditions, expressed or implied, including warranties of merchantability, quality or fitness for particular reason or those arising by laws, statutes or trade usage or course of dealing.

The entire risk, as to the results and performance of the release device, is assumed by the customer. Neither Telonics, nor its suppliers, shall have any liability to the customer or any other person or entity for any indirect, incidental, special, or consequential damage whatsoever, regardless whether Telonics has been told of the possibility of such damages or that such damages might be foreseeable. Telonics has no responsibility or liability for the claims of any third party. Telonics' and its suppliers' maximum aggregate liability shall not exceed the amount paid by the customer for the release device.

The above warranty and limitations extends only to the original purchaser and does not cover any release device which is resold or otherwise transferred from the original purchaser to another party. The warranty will be extended to customers who purchase the release device directly from a Telonics-authorized distributor.

7.1 Exercising the Warranty

If a defect occurs, return the CR-7 to Telonics within the applicable time frame noted above at the following address: TELONICS, 932 E. IMPALA AVENUE, MESA AZ USA 85204-6699. Telonics does not assume responsibility for loss or damage to equipment during shipment. Telonics does not assume responsibility for delays resulting from shipment on commercial or private carriers. We insure all equipment shipped from our facility and suggest that shipments to Telonics also be insured. Customer shall arrange for and pay all shipping, insurance and related charges incurred in the shipment of release devices to and from Telonics under this warranty.

Upon the timely return to our facility within the applicable time frame noted above, if the exterior packaging integrity and/or internal electronics (excluding batteries) are defective, the CR-7 will be replaced or repaired, at Telonics' sole discretion, at no cost to the customer, other than shipping charges. This remedy is the exclusive remedy.

The CR-7 collar release devices are sold and warranted separately from radio transmitter, satellite or GPS collars or any other devices. Repair or replacement does <u>not</u> include the collar, transmitter, satellite PTT or GPS unit and does not include capture costs.